CE

TR-A212/TR-A213 BANDING MACHINE

INSTRUCTION



The machine can only be operated by correspondent person.

Routine Safety Notes:

The following points must be noted before operating or doing maintenance on the machine:

BEFORE

- → Being ready after reading the instruction.
- → Check with all components of machine and replacing the worn spare parts by new ones (Original factory produced components are recommended).
- → Please confirm there is no tools or other things on the machine and keep the machine clean.
- → Please read the instruction and maintenance details carefully.
- → Please read the machine application notes and important marks & symbols carefully.

During the operation period

- → Don't dress in loose clothes in case to prevent clothes from being drawn into the machine's moving units.
- → Please do not operate the machine barefoot.
- → Please keep the realistic and suitable working distance of your hands and other tools…
- → Please do not band products exceeding the machine's banding range because the machine can only band products within the applicable range.

AFTER

- → Confirm all of switches of electronic control are in power off status.



The machine can only be operated by correspondent person

SERVICE AND SAFETY REGULATION

- → Please keep the service instruction carefully.
- → Please do not set up the data or use lubricant during the machine is working.
- → Please cut off the electricity supplying before open the protective cap.
- → Please do not install other additional components which has not got authority from our company in case to keep the machine operate well.
- → Please use factory original components.
- → Please use the power supply system according to machine's electronic requirement.
- → Please do not tear up or cover the machine type instruction or safety warning indication symbol on the machine surface.
- → Please operate the machine according to the instruction.



The machine can only be operated by correspondent person

Notice:

Please keep the machine and components in clean situation and slush lubricants on the moving units regularly. And the regular checking and maintenance on the electronic control units should be arranged in case to keep the machine work well.

INDEX

UNIT 1 SAFETY NOTICE.....6

1-1 WARNING MARKS AND SYMBOL.....6

1-2 INSTALLATION NOTICE.....6

1-3 OPERATION NOTICE.....8

1-4 MAINTENANCE NOTICE.....8

UNIT 2 MACHINE INTRODUCTION.....9

2-1 TECHNICAL DATA.....9

2-2 MACHINE SPECULATION.....9

2-3 ACCESSORIES ACCOMPANY THE MACHINE.....9

UNIT 3 OPERATION.....10

3-1 INSTALLATION OF THE BANDING STRAP 10

3-2 CLEANING OF STUCK FILM (STRAP).....10

3-3 ADJUSTING CONVEYING FILM (STRAP) PRESSURE.....111

3-4 WITHDRAWING FILM(STRAP) PRESSURE.....11

3-5 ADJUSTING CUTTING OF FILM(STRAP).....12

3-6 INSTRUCTION OF CONTROLLING UNIT.....12

3-7 INSTRUCTION OF TOUCH SCREEN.....14

UNIT 4 MAINTENANCE AND PROBLEM SOLVING.....17

4-1 MAINTENANCE.....17

4-2 PROBLEM SOLVING.....18

UNIT 5 CIRCUIT DIAGRAM.....21

UNIT 1 SAFETY NOTICE

1-1 WARNING SYMBOL AND MARKS

THE FOLLOWING SYMBOLS AND MARKS ARE PASTED AT THE POSITION ON THE MACHINE WHERE THE WORKING PERSON MAYBE HARMED. THEY ARE FORBIDDEN TO BE REMOVED OR REPLACED. PLEASE CUT OFF THE POWER SUPPLY BEFORE REPAIRING THE MACHINE.

1. Just as per Drawing 1-1, Mark or symbol can not be arbitrarily removed or replaced, there is danger of scalding indicating high temperature heating. Please do not touch the around part of machine near the warning signs being pasted.



图 1-1

2. Just as per Drawing 1-2, The symbol and mark indicates that the existence of the risk of electric shock after the door is opened or removed. The stickers cannot be free to replace and removed. The sticker are usually located at the electrical parts.



图 1-2

3. Just as per Drawing 1-3, Signs: prohibit the body or hand into the channel below.



图 1-3

1-2 INSTALLATION NOTICE

- **INSTALLATION ENVIRONMENT NOTICE**

1） Machine's power cable should be put at untouchable place. It can prevent the electricity shock when the cable is worn and broken.

2）The power line should be configured to be un-contact with the moving parts. The skin of wire is easy to be broken if the wire contact with the moving parts of machine. Since there is a risk of electric shock, please replace the wire when there is damage.

3）The machine should be placed away from oil and water because the internal electrical components are forbidden to contact with water and oil in case to prevent shock, leakage and other faults occurring.

4）Please do not put the machine in a low temperature warehouse or a place with severe temperature changes. Or the internal electrical elements are easy to be frozen or condensed and cause electric shock, leakage and other faults.

5）Please put the machine in a place where the ambient temperature is -10~+40. In the low temperature environment, internal electrical parts easy to be frozen and condensed caused by electric shock, leakage accident. Too high temperature will also be a failure.

●POWER SUPPLY CONNECTION NOTICE

1）Please use the power line of the specified specification by us.

2）Please insert the plug into the socket which is connected with the leakage current circuit breaker.

3）Do not use wet hands to plug, pull the power plug because there is a risk of electric shock.

4）Power line must be inserted into a socket (3holes) with application of earth wire.

5）When connecting or taking down the earth wire, be sure to unplug the power plug. If not pulled out will be the risk of electric shock.

6）The earth wire must not be connected to the gas pipe because of risk of explosion or fire.

7）The earth wire should not connect with the water pipe because the earth wire may not be effective working sometimes.

8）The earth wire can not connect with the telephone professional grounding terminals because it will bring noise to the phone.

● Removing Machine Notice

1）When moving the machine, be sure to cut off the power supply, unplug the power plug.

1-3 Operation Notice

1）Absolutely can not open the upper cover during operation because the risk of injury when the part of body being exposed to the driving position.

2）Please do not use your hands to touch exposed moving parts during operation. It is possible to be caught in a hurt.

3）Please do not remove the safety shield, operating panel, etc. when running the machine.

4）Please don't touch the rotating parts of the machine. There is a possibility of being dragged in the injury.

5）Do not touch the heater and the periphery while the electronic circuit is working well. High temperature heater will cause burns.

6）After the power is turned off, the heater needs cooling, please don't touch it.

7）The hands and fingers do not put in the package with the strap (film) ring during the machine is banding. Because it is possible to be clipped and injured.

8）Using straps(film) will scratch the hand sometimes, please be careful during operation.

9)When there is thunder in rainy days, please cut off the power supply, unplug the plug and stop using the machine. Because lightning can cause damage to the internal IC circuit board.

10）The packing object on the machine should be below 30kgs at weight.

11）During banding operation, please put or take away the packed object gently to avoid the possible collision.

1-4 MAINTENANCE NOTICE

1）For the maintenance and adjustment of the machine, please let the professionals to do the job.

2）To machine maintenance, inspection, cleaning, be sure to cut off the power supply, unplug the power plug.

3）Do not arbitrarily transform the machine. Because the transformation of the machine may occur by mistake, resulting in unexpected injuries and machine damage, etc..

4）Please clean the banding strap(film) and its slag attached to the machine internal walls regularly.

5）Please do not use the others operating methods, materials, tools,..etc which has not be listed in the instruction..

UNIT 2 MACHINE INSTRUCTION

2-1 Technical Data

Measurement**	：	L642mm×W354mm×H476mm
Banding Strap(Film)	：	Coated Paper / OPP Film
Width of Strap (Fim)	:	20/30 mm
Strap Roll Disk	：	ID of banding strap disk 40 mm
		OD of banding strap disk 180mm
		Width of banding strap roll disk 30 mm
Single Banding Time**	:	≤3s
Banding Tighten Force	：	5-40 N
Banding Object Size	：	Largest: 473mm×206mm ， Smallest : 30mm×10mm
Voltage•.Frequency	：	220V，50/60Hz
Power	：	80W
Net Weight**	：	32kg

Description: * * change at any time without prior notice.

2-2 Machine Speculation

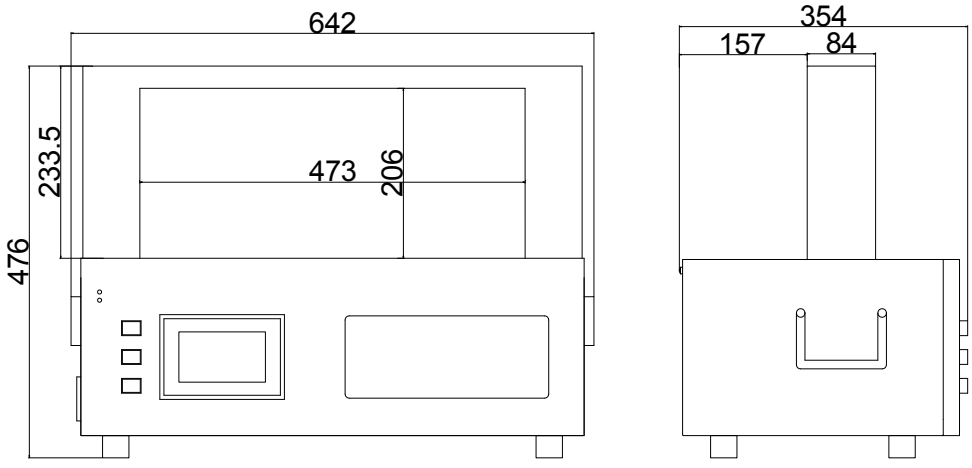

2-3 ACCESSORIES ACCOMPAY THE MACHINE

The machine with the following accessories, please confirm carefully, and understand the contents inside. And please keep it well, don't lose it.

INSTRUCTION ： 1PCE

TOOLS：1SET

OTHERS：CERTIFICATE & WEARING PARTS

UNIT 3 OPERATION

3-1 INSTALLATION OF THE BANDING STRAP

Please confirm the correspondence between the kind, width of banding strap with the machine speculation. The installation of banding straps is showing in following procedure:

1）Open the right door。

2）Put the straps disk on the white nylon conveying strap roller。And the beginning of strap should be in the same direction as the drawing showed.

3）Tear off the seal on the strap beginning and begin inserting the straps.

4）As per the drawing, pull the straps through the transition wheel 1..

5）Strap beginning should go through the gap between the driving wheel 2 & driven wheel 3. Or it will be ineffective strap inserting.

6）Push the “Conveying Strap” button.

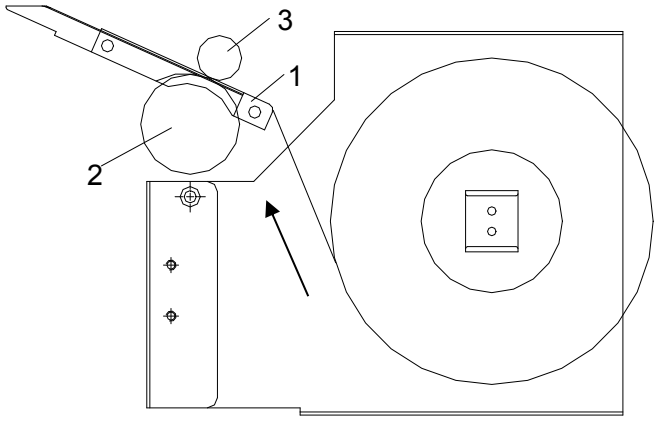

图 3-1

Notice: The direction of strap pulling must be as same as the direction showed on the drawing to avoid more problems on conveying straps.

3-2 CLEANING OF STUCK FILM (STRAP)

When the machine does not convey strap(film) because of the film(strap) be stuck inside the machine, please pull out strap(film) from the strap conveying slot. Then clean the stuck strap(film) as per the following points.

Unscrew the screws on the cover panel 2 above the strap conveying slot, take away the cover panel 2. Then take out the stuck strap(film) from conveying slot 1.

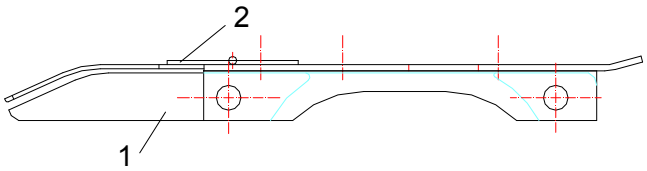

Notice： During adjusting and calibrating, the power must be turned off. And the power plug must be taken away from socket！

3-3 ADJUSTING FEEDING FILM (STRAP) PRESSURE

1）As per the below drawing, unscrew the screw 1.

2）Adjusting the position of spare part 2's up/down to increase or decrease the pulling force on conveying strap(film) spring 3. The pulling force of spring 3 is the pressure on driven wheel 4. The pressure on driven wheel 4 is the pressure of conveying strap(film).

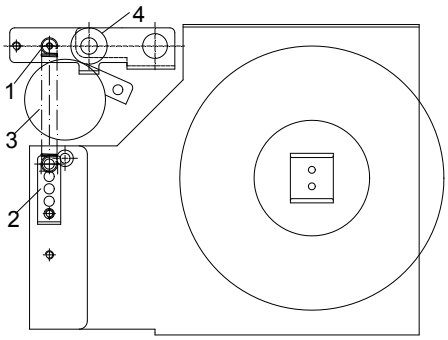

3-4 ADJUSTRING REJECTING STRAP(FILM) PRESSURE ADJUSTING

As per the drawing, swirl the knurl nuts and drive the screw arbor moving up or down to adjust the banding tighten force (knurl nuts) must be close with each other.

Notice: The tension should be adjusted to medium and weaker range when you use the paper tape(strap). Or there will be the tape(strap) being broken and tape(strap) ends not being melted to stick with each other.

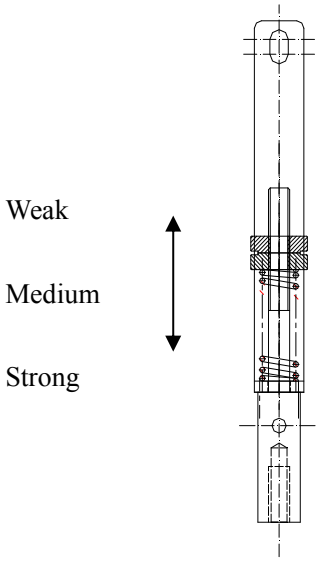

3-5 ADJUSTING CUTTING OF FILM(STRAP)

Because the cutter is consumable components, we design the separated structure of cutter combination. This structure is more easy-going on replacing & dismantling the consumable parts in case to save cost.

The simple structure of middle cutter and front cutter just like the drawing below, No.3 is front cutter;

No.2 is the middle cutter,

No.1 is the ball set screw. Its function is supplying the pressure on cutting tape for No.2 & No.3 cutter. During the adjusting process, the pressure between them should be suitable (medium) level. Too much will cause one of front cutter or middle cutter does not move down to cut. Too small will not finish the cutting normally.

How to Adjust:

1）Dismantle the covering board on the machine.

2）Dismantle the band channel totally.

3）Use the special tool to ajust No.1. Then adjust the pressure of No.2 & No.3.

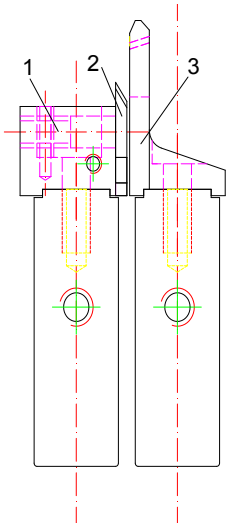

3-6 CONTROL UNIT OPERATION INTRODUCTION

This machine apart from the power switch has a power off switch, the power will be off automatically when the door of control unit be opened to replace the banding film(tape or strap).

The machine has two operating mode: manual and automatic. The user can operate machine by touch screen. And the manual mode is the default operating way.

Automatic operating mode: The detection of material (reaction start) on the top of machine starts up, when an item is detected, the machine does withdraw banding tape and banding tight action. After completing banding, the tape(strap) channel's structure will be open to wait a short interval in case to let the item being take away. Then the machine banding unit will

continue move back to original place and automatically convey banding tape(strap). It means one complete banding job being finished.
Manual work modes: It is controlled by the panel or touch screen. Pressing the touch screen icon or adjacency buttons to start operation. Pressing the run button after the machine withdraw tape(strap) and banding tighten action., After the completion of the wait time as decided by the set of values on the touch screen, the machine automatically back to original place. And the machine automatically feed tape(strap). It means one complete banding job being finished.

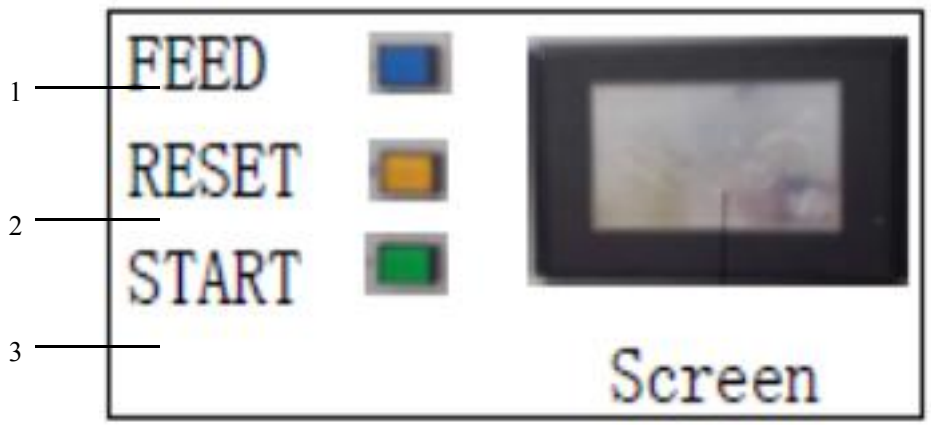

1, **Feed** Button: When the machine is in the original place without banding action. Press the button, feed/reject motor starts. The machine begin feeding tape (strap). Release the button, the conveying action pause. If the user keep on press the button (feed), the conveying banding tape will be automatically stopped when it reach the position(fully conveying).
2, **Reset** Button: The machine will return to the original place. When the machine's banding unit is in situ position, The machine will stop after cutting the tape and open the banding tape channel.
3, **Start** Button: When the machine's banding unit is at the following situation: In Situ, Conveying tape(strap) at position before banding, Interval between two banding operation., the user press this button, the machine will do the banding operation.
4, **Screen**: The user can operate the machine by touching screen to adjust parameters and settings.
Notice:
1, You can let the machine back to original place by pressing the reset button when the machine is not working correctly. You can also turn off the power supply to let the machine back to in the original place. Then the machine will automatically convey a section of tape (strap) as per the preset time. Finally the machine is power on and back to original place without feeding tape(strap) again.
2, Reset button is within the limitation of interval.

3-7 Touch Screen Operation Introduction

1. Machine power on, the touch screen show the main display interface



If necessary adjust the parameters and settings, click on the right corner of the touch screen parameter setting tool icon to enter the Setup menu.

2. Parameter Setup Interface

In the main menu click the icon (TOOL) on the lower right corner. Then the touch screen display the below interface.



● Click on the icon (Common Parameter) or the text underneath. Then the touch screen will display the parameter settings screen.

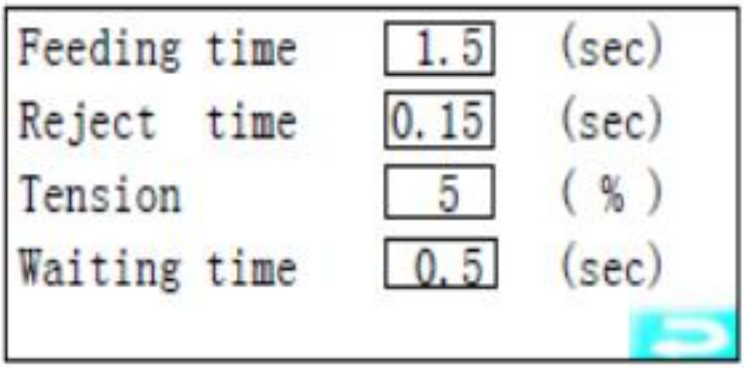

The Next Page.

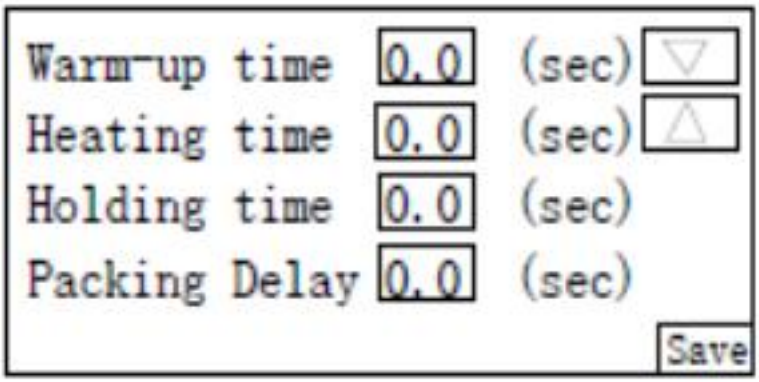

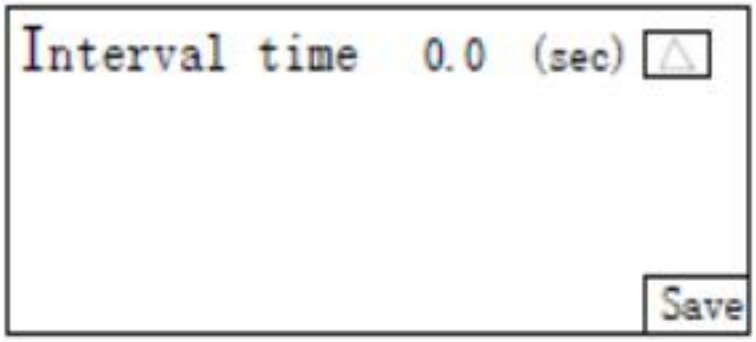

Parameter adjustment methods are as follows:

I. Click the previous or next buttons find the parameters which need to be modified.

II. Click the values in the red box, open the correspondent Modify window.

III· Press left or right icon (white box with red arrow) increases or decreases the parameter in values. Keep on pressing on the icons to get values more or less.

IV. Click OK button to close the window. (Note that the parameters have not been saved yet!)

V. Click the return or save button and back to the main menu. Then the user can finish parameter changes finally.

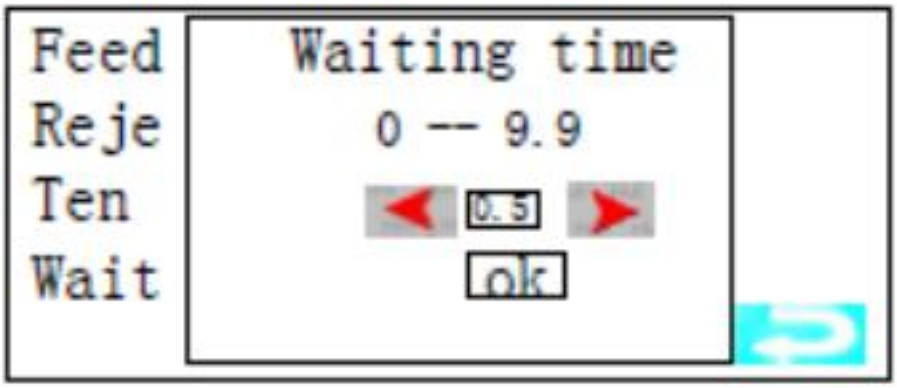

Each parameter definition:

I.**Feeding Time**: when the machine is running, its default value is 0.6 seconds. The setting ranges is 0-2 seconds.

If you change the strap(tape) or meet situation of conveying tape(strap) does not reach realistic position due to mechanical wear, you can adjust the parameter appropriately (more or less) .

II. **Reject Time**: When the machine is running, its default value is 0.26 seconds, The, setting range is 0.05~0.5 seconds.

If you change the strap(tape) or meet situation of rejecting tape(strap) does not be tighten up due to mechanical wear, you can adjust the parameter appropriately (more or less) .

III. **Tension**: During the banding process, there is the 2nd section of reject tape(strap) after the user setup the reject time. All of the relevant parameters are collectively known as Tension. Default value is at 6 grade. The default range is 0~99 grade(%).
The parameter does not need to set up too high. Please do adjustment according to the actual situation of banding objects.
IV. **Waiting time**: During the banding process, the motor will stop at the time point when the tape(strap) channel open after finishing cutting the tape(strap). Then the machine's banding unit will be back to in situ after the waiting time is running up. The default value is 0 second. The setting range is 0~9.9 seconds.
The user can increase the waiting time as per actual situation if he does not take away the banding object immediately after finishing banding.
V.**Warm-up time**: The heating preheating time after the machine is power on. During the period, the heater can heat up to working temperature. The default value is 3 seconds. The, setting range is 0~9.9 seconds.
The warm-up time can be longer by setting up the parameter When ambient temperature is a bit low.
VI.**Heating time**: The setup time about heater being power on during one working cycle. The default value is 0.3 second. The setting range is 0~9.9 seconds.
VII.Holding time: The setup time about heater being power off during one working cycle. The default value is 0.6 second. The setting range is 0~9.9 seconds.
The user can adjust the parameter more or less appropriately if the banding effect is not ideal because the temperature of heater is too high or low. So the heater temperature can not be too high because the service life of heater will be shorten if the parameter has not been setup properly.
VIII. **Packing Delay**: Under automatic mode, the duration (lasting time) of effective signal by photoelectric sensor in case to start up banding. The default value is 0 seconds. The setting range is 0-2 seconds.
Free to adjust according to the situation. The parameter will not be effective until the user choose "sensor switch starts" option.
IX. **Interval Time**: The next banding will not continue until the previous task is finished and the interval time is running up. The parameter is applicable under automatic mode. The default value of 0.5 seconds. The setting range is 0-5 seconds.
Notice: The A/M parameter has been tuned before they being delivered from factory. The user does not need to do adjustment and test repeatedly. The user can restore the default parameter by click the icon of "restore factory settings" under icon "Other Options".

●Click on the icon of "Other Options" or text to other options interface.

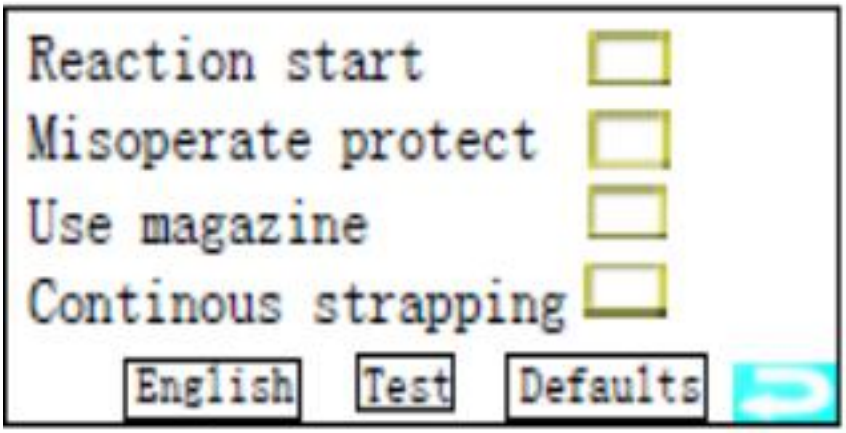

I. **Reaction start:** after choosing this option, the machine will be in automatic mode as well. The sensor photoelectric detects the banding object for a short time. Then the machine will be starting up to do banding automatically.
II. **Misoperate protect**: After choosing this option, during the banding process, the machine's situation will be regarded as "Misoperate" if the sensor switch has no signal when the machine is withdrawing tape(strap). The motor will stop at the position where the tape(strap) channel is open after cutting off tape(strap). Press Reset button or icon, the main motor will move back to in situ.
III. Use magazine: After choosing the option, the photo-electricity component on the tape(strap) deck will control the conveying tape(strap).
IV. **Continuous Strapping**: Continuous packing(banding).
V.Ports detection: It is displayed as the following figure.



When the sensor detects a signal, corresponding LEDs will be lit in the screen (yellow). when there is no signal, the LED is in the off State (red). Press the return key to get back to the upper level of the menu.

VI. To restore default settings: The parameters on the screen and options will be restored to the default settings before delivery from factory.

UNIT 4 Maintenance and Problem Solving

4-1 maintenance

1. The user must turn off the power before maintenance.
2. Cleaning the inside of the machine to be recommended.
3. Regularly check the power cord and electrical parts for damage, loose, and so on.
4. periodically check the cutter, rocker arm, skater, arbors and other moving parts to confirm whether are there serious worn situation.

5. Checking for loose bolts, nuts on a regular basis.
6. Regular lubrication of moving parts.

4-2 Problem Solving

●Problem 1: The machine does not work.

Item	Reason	Solution
1	Safety Switch not at close position	The right door has not be close tight. The touch sensor of safety switch has not been pressed tight.
2	A. There is no fuse in the socket. B. The fuse is broken.	Replacing fuse.
3	Socket, plug or power cable becoming loose	Check with the power supply and the correspondent connection units
4	Circuit Board Fault	Inspecting or replacing the circuit board

●Problem 2: Cutting Tape(Strap) in abnormal condition

Item	Reason	Solution
1	The middle cutter or front cutter have been worn too much	Replacing middle cutter or front cutter
2	The screw of front cutter being loose	Tightening up the screw of front cutter
3	The pressure between the middle cutter and front cutter is too low	Adjusting the ball set screw pressure (Keep the pressure distributed on both sides evenly. The pressure should be appropriate. Too much pressure will cause the middle cutter does not cut down.)

●Problem 3： Tape (Strap) Blocked or with folds on surface

Item	Reason	Solution
1	Tight up force is too big	Adjust the force a bit properly
2	The gap between the conveying tape(strap) and driving wheel is too big	Adjust the gap, the gap ≤0.2mm
3	There are burrs, other stuffs not correspondent with machine in the tape (strap) channel	Clean it immediately
4	There are burrs, other stuffs not correspondent with machine in the conveying tape (strap) slot	Clean it immediately

● Problem 4：The machine does not withdraw the tape(strap)

Item	Reason	Solution
1	Proximity switch did not detect signal	1.The touch panel did not reach the final position. 2.Proximity switch is too close on position.

2	Motor fault	Check with the motor and connection cable is in normal situation.

●Problem 5：Did not convey strap(tape)

Item	Reason	Solution
1	Proximity switch detected signal.	1.The touch panel did not go back to in situ; 2. Proximity switch is too far on position.
2	There are burrs, other stuffs not correspondent with machine in the tape (strap) channel	Clean it immediately
3	Motor fault	Check with the motor and connection cable is in normal situation.

●Problem 6：Tape (Strap) drifted

Item	Reason	Solution
1	The gap between the Guiding Tape(strap) slot and Guiding frame is too big	Adjust the gap≤2.0mm
2	The junctions between every section of tape(strap) slot are dislocated	The exit of tape(strap) slot junction is higher than the entrance tape(strap) slot junction
3	The gap between sections of tape(strap) slot joint gap is too big	Adjust the gap≤2.5mm

●Problem 7：Strap can not be taken away from the Strap Frame

Item	Reason	Solution
1	Strap frame without movement or the moving distance is too short	1.Pull the steel wire a bit properly; 2.Check whether the spare parts are worn
2	Strap France is not in balance	1.Pull the steel wire which near the left and right sides properly. 2.Straight Line Axis Basement screw loosen. 3.Straight Line Bearing guide rod loosen.

●Problem 8： Cam moves incorrectly

Item	Reason	Solution
1	The micro switch loosen or damaged	Adjust or replace the micro switch
2	The cam and correspondent components being worn	Replace the cam and correspondent components
3	Circuit Board Program Fault	Replace the Circuit Board

●Problem 9： Sending Button & Project Detecting Sensor not work

Item	Reason	Solution
1	The micro switch loosen or damaged	Adjust or replace the micro switch

●Problem 10： Strap Ends Heat Melt not good

Item	Reason	Solution
1	No temperature on heater	1.The heater or electrical circuit broken; 2. The connecting screw between heater and wire became loosen.
2	The temperature is too low	Adjust the heating up time longer by click the correspondent parameter on touch screen
3	The temperature is too high	Adjust the heating up time shorter by click the correspondent parameter on touch screen
4	The pressure on the heater and sliding block	1.The support of sliding block is loosen; 2.The cam worn 3. The internal up-spring pad of cutter kit became out of shape
5	The surface of heater become uneven	Replacing the middle cutter

●Problem 11： The sliding block did not back to In Situ

Item	Reason	Solution
1	The micro switch loosen or damaged	Adjust or replace the micro switch

UNIT 5 CIRCUIT DIAGRAM

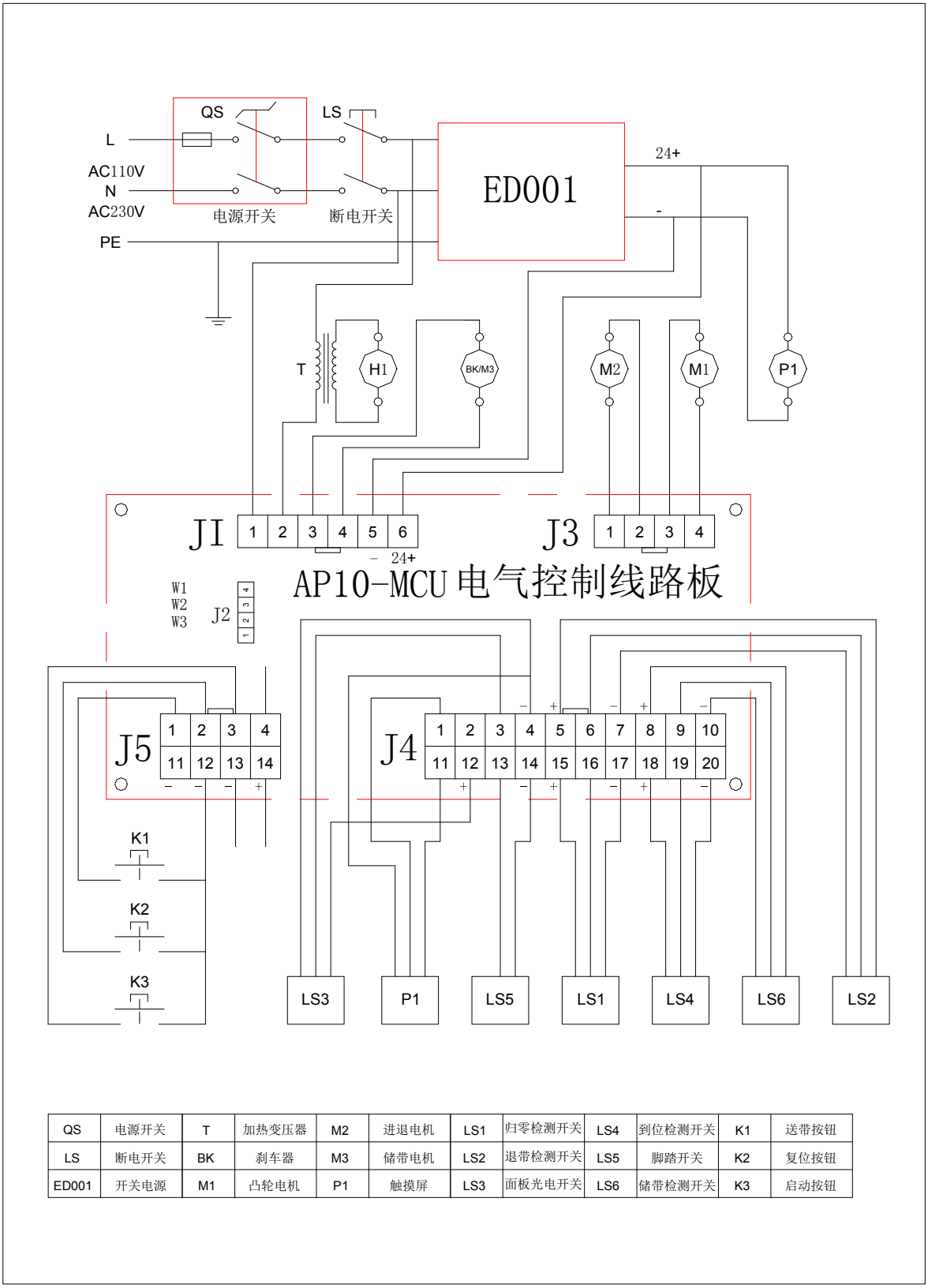

QS	电源开关	T	加热变压器	M2	进退电机	LS1	归零检测开关	LS4	到位检测开关	K1	送带按钮
LS	断电开关	BK	刹车器	M3	储带电机	LS2	退带检测开关	LS5	脚踏开关	K2	复位按钮
ED001	开关电源	M1	凸轮电机	P1	触摸屏	LS3	面板光电开关	LS6	储带检测开关	K3	启动按钮